LEMARK

W9

Multi-function family travel light

Lighting
Dimming
Warning
Anti-mosquitoes
Bluetooth Speaker
DC5V/12V Output
Mobile power
Mobile phone fast charge
Car refrigerator
Built-in tripod

Multi-shift dimming free switching

Strong , medium and low light, three adjustable modes to meet various usage scenarios

Strong
Medium
Low

Emergency mode，
red and blue warning light

Blue and red two-color, emergency strobe, outdoor emergency and warning signal

Mosquito repellent artifact

Outdoor camping, outdoor party, one-button mosquito repellent, no mosquito bites

No mosquitoes, no insects, light waves, mosquito repellent

Using mosquitoes dislike light waves

effectively repel mosquitoes

Bluetooth connected ,enjoying freedom

Uninterrupted within 10 meters,
Compatible with a variety of music devices,
enjoy freedom wireless listening fun

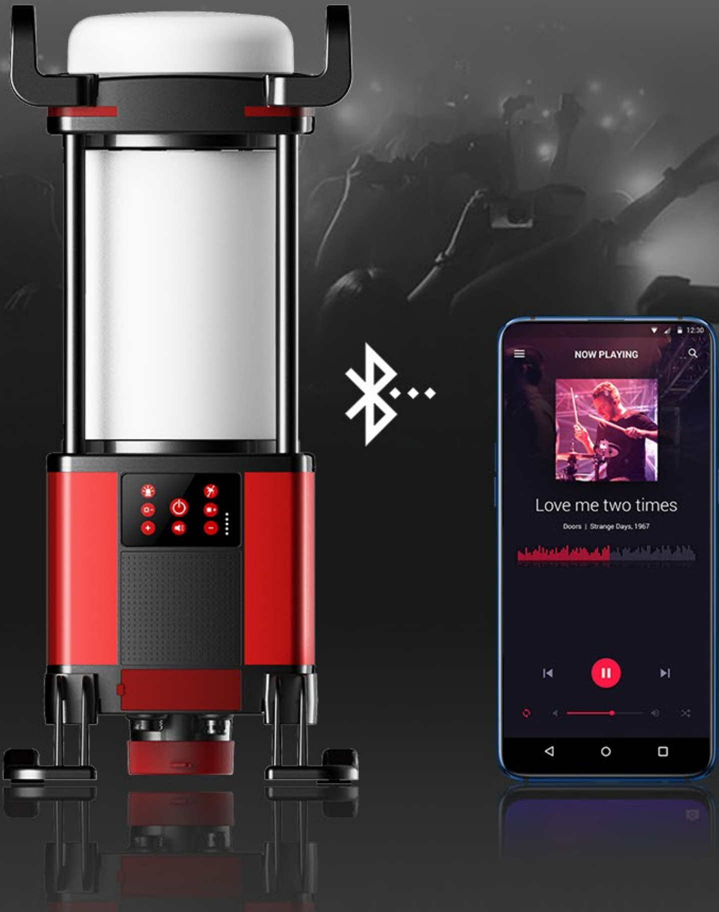

360° surround dual stereo stereo design

20W high power output, low accent design, shocking experience,
3D surround, immersive

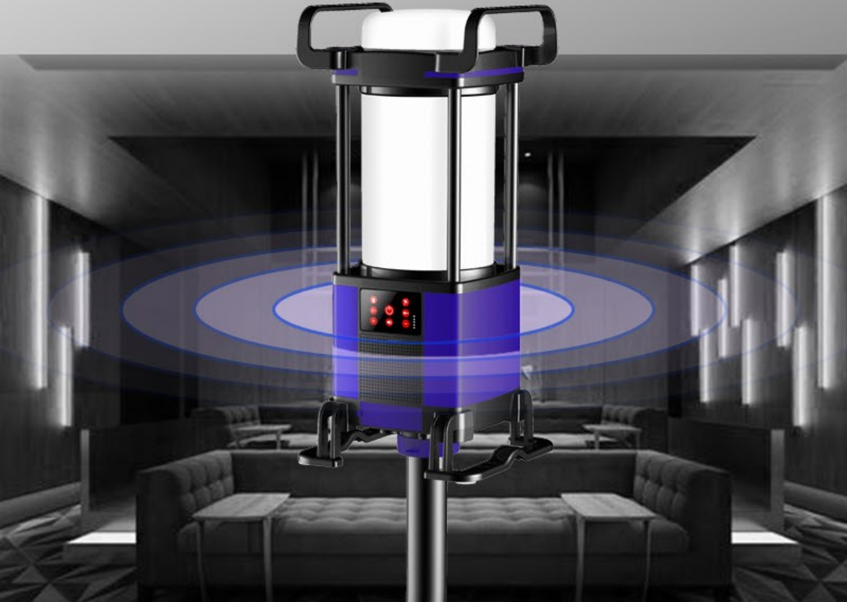

Widely compatible, unconstrained

TYPE-C+ fast charge function, more in line with future interfaces

More intimate **12V output function,** charging for your appliance in time

Good helper for outdoor and blackout moments.

Mobile phone

Car electric inflator

Respirator

12V car refrigerator

Car rice cooker

iPad

Maintainable the mobile refrigerator for 48 hours,

Necessities for barbecue outside the house

Large capacity battery , long battery life

6 hours lighting time, 20 times of iPhone charging ,using high-bearing 62400mAh lithium battery

Mcdodo
手机百度
电话
联系人

Fearless of wind or rain

IP65 waterproof

Increase the respirator to balance the internal and external pressure

Reach professional waterproof requirements

Hidden telescopic tripod

The tripod adopts a built-in structure design,
convenient to storage and save storage space.
Different height adjustments for different scenarios

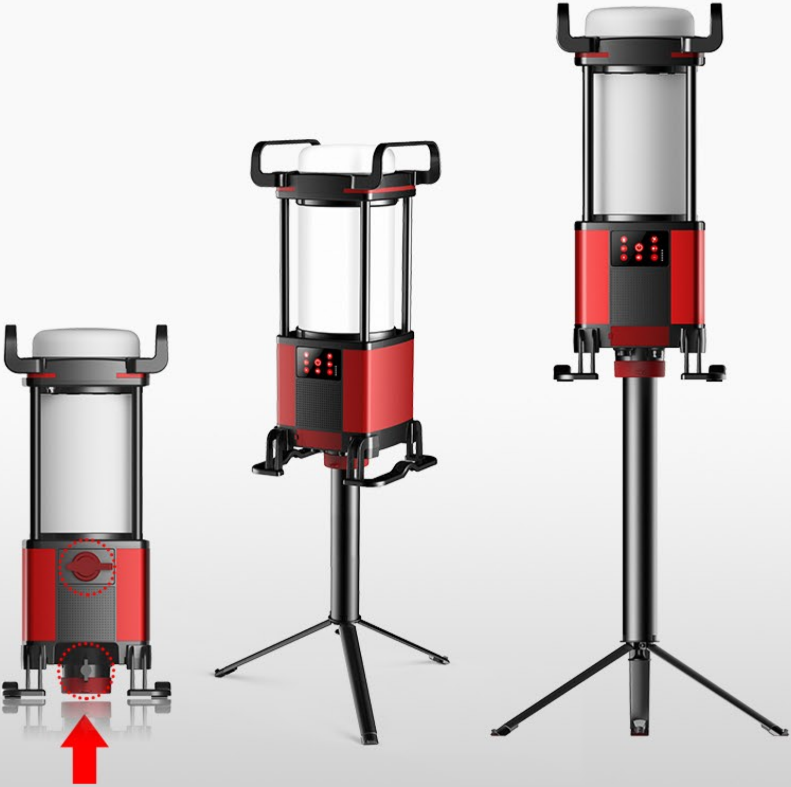

Built-in tripod structure design,
unscrew the switch and pull it down to quickly retract

Handle scientific design

High impact resistant material,
wear-resistant and anti-fall all-round protection lamps,
more convenient for operation

Simple and easy to press ·

One step in place

Only to look for wonderful moments

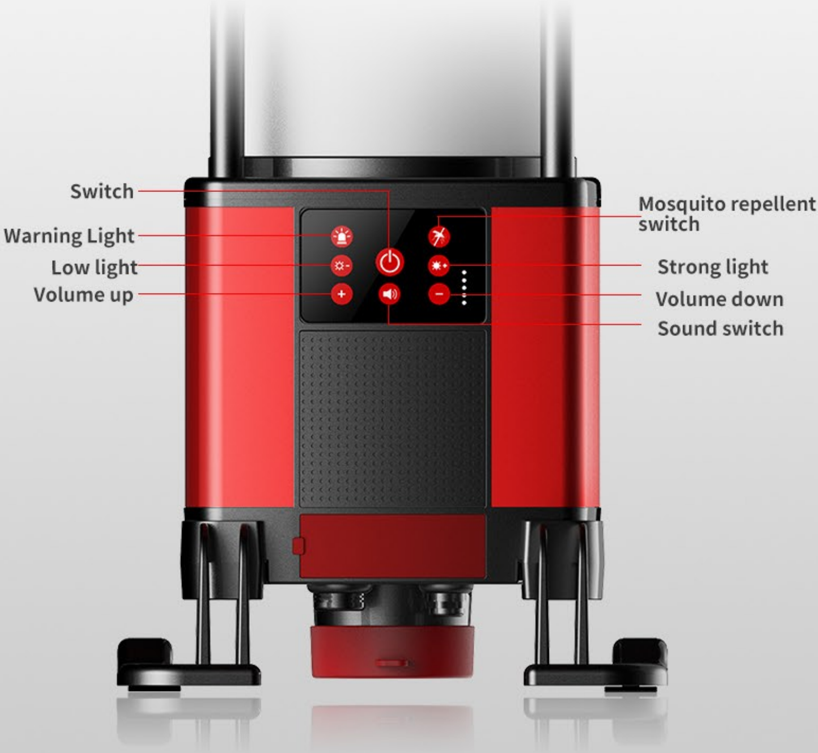

Multiple ways to recharge

Don't worry about power problems

Recharge the work light through the household power supply, or solar panel

Solar charging

Adapter charging

Car charger

PORTABLE
POWER GENERATOR
250W

Battery charging

Life, multi-scene application

Power failure emergency · Camping in the wild · Road rescue warning ·
Small construction site lighting · Emergency Rescue

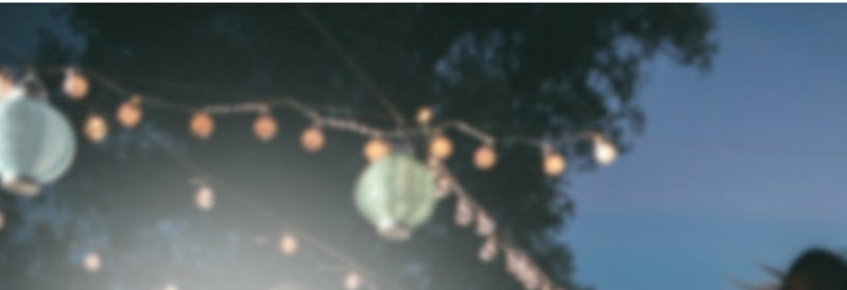

Easy to carry

Satchel design， more convenient to carry

Shoulder resistance **Portable 1** **Portable 2**

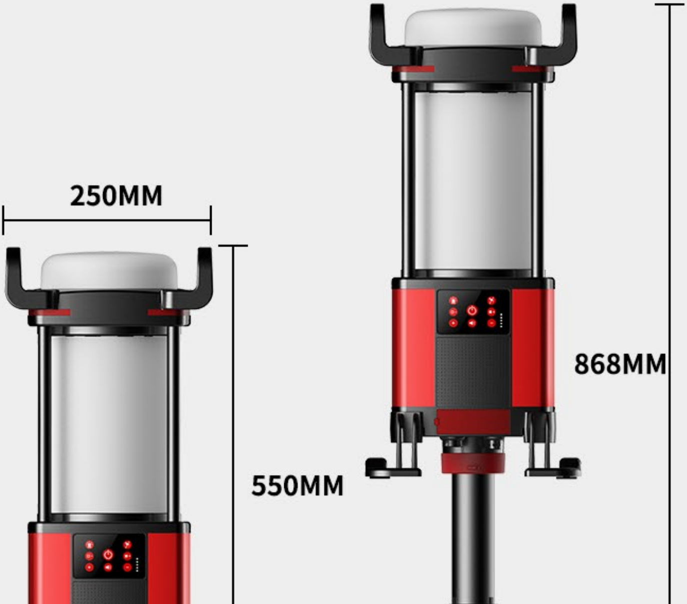

4 colors available

🟥	🟧	🟩	🟪
red	orange	grass green	royal blue

Product specification

Battery capacity :	built-in 24*18650 lithium batteries ,Max. Capacity 62400mAh
Power :	40W,80W
Bluetooth version :	Bluetooth 4.2
Speaker power :	4Ω 20W, volume adjustable
Lighting mode :	Strong /Medium /Low (adjustable)
DC output :	DC 5V 3A , DC 12V 8A Output
Certifications :	CE.ROHS,FCC
IP rate :	IP65 waterproof
Product color :	red , orange , grass green , royal blue
Product size (MM) :	H550*W250*L250